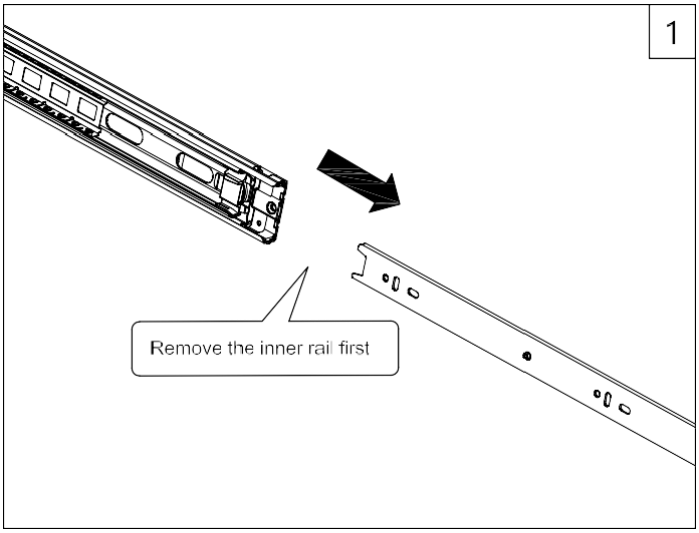
1
Remove the inner rail first

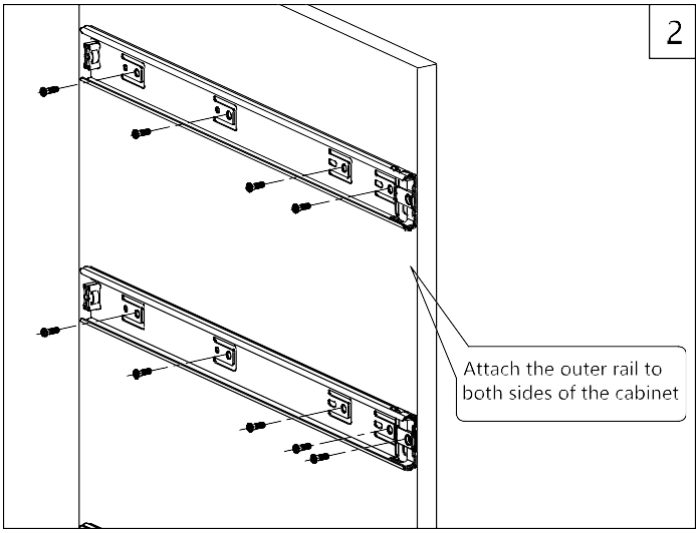
2
Attach the outer rail to both sides of the cabinet

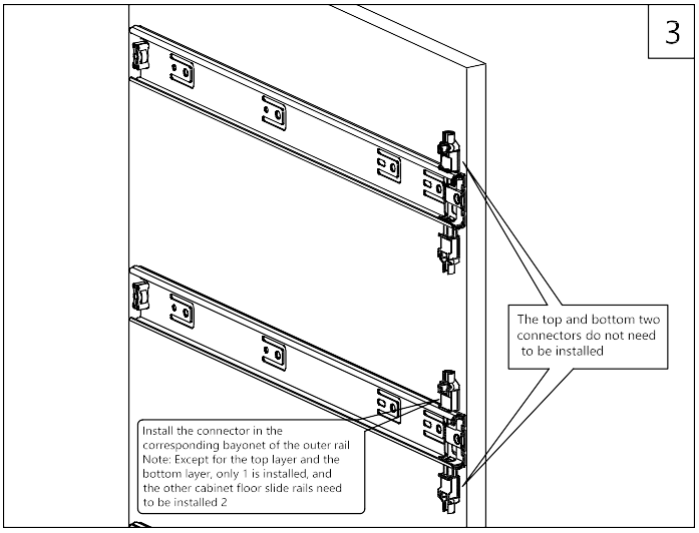
3
The top and bottom two connectors do not need to be installed
Install the connector in the corresponding bayonet of the outer rail
Note: Except for the top layer and the bottom layer, only 1 is installed, and the other cabinet floor slide rails need to be installed 2

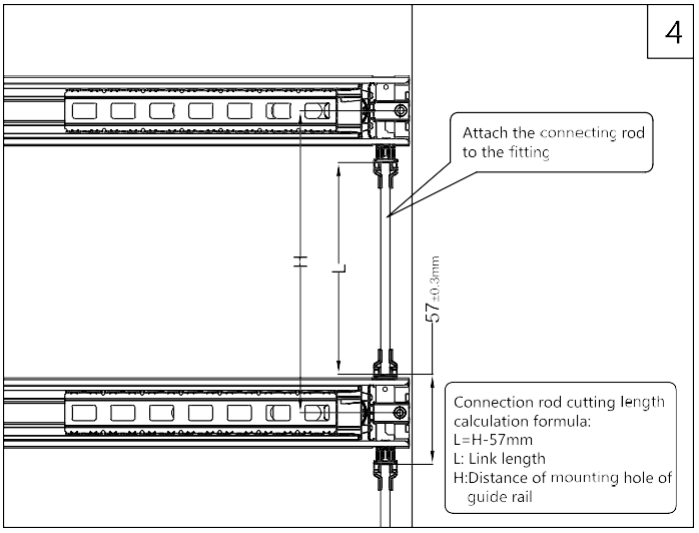
4
Attach the connecting rod to the fitting
H
L
57±0.3mm
Connection rod cutting length calculation formula:
L=H-57mm
L: Link length
H:Distance of mounting hole of guide rail

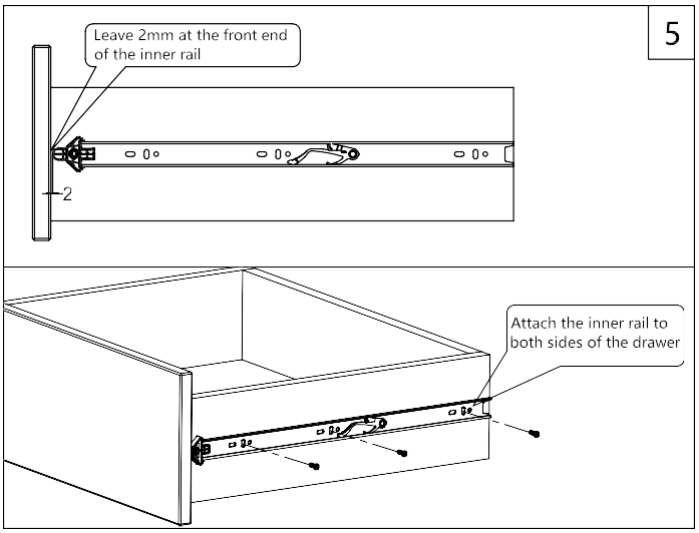
5
Leave 2mm at the front end of the inner rail
2
Attach the inner rail to both sides of the drawer

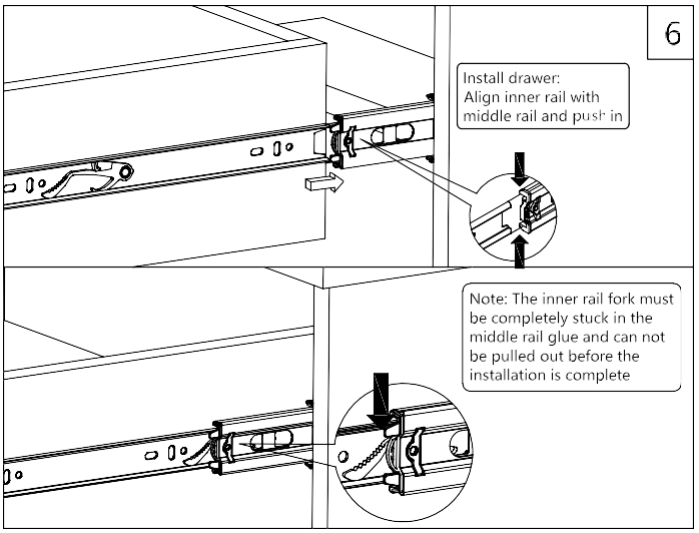
6
Install drawer:
Align inner rail with middle rail and push in
Note: The inner rail fork must be completely stuck in the middle rail glue and can not be pulled out before the installation is complete